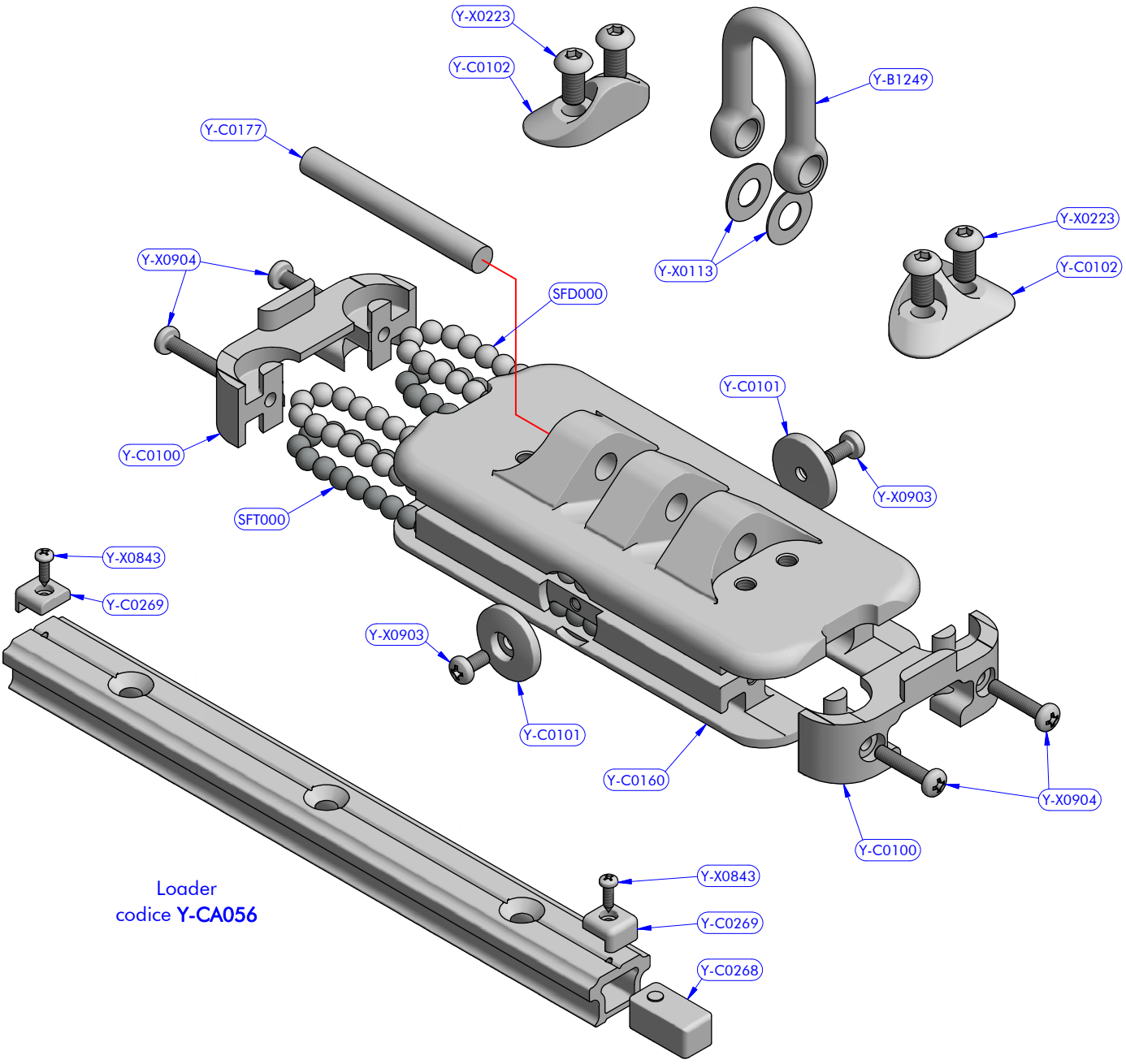

MAIN CAR PARTS LIST			
CODE	DESCRIPTION	MATERIAL	Q.TY
SFD000	Delrin ball 1/4"	Plastic	86
SFT000	Torlon ball 1/4"	Plastic	86
Y-B1249	Shackle	S.Steel	1
Y-C0100	Ball race cap	Plastic	2
Y-C0101	b.b. load window	Plastic	2
Y-C0102	Pin stop	Plastic	2
Y-C0160	Slider corps	Aluminium	1
Y-C0177	Axis	S.Steel	1
Y-CA056	Loader	Various	1
Y-X0113	Washer	Tufnol	2
Y-X0223	Screw	S.Steel	4
Y-X0903	Screw	S.Steel	2
Y-X0904	Screw	S.Steel	4

TRACK ASSY PARTS LIST			
CODE	DESCRIPTION	MATERIAL	Q.TY
UTE	n.d.	Aluminium	1
Y-C0268	Track joint	Plastic	1
Y-C0269	Safety car stop	Plastic	2
Y-X0843	Self-tapping screw	S.Steel	2

antal	4Race series (FAMILY)	Main car (ARTICLE)	4150/SH (MODEL CODE)	25/03/2020 (DATE)	00 (REV.)
	Exploded view (DESCRIPTION)			20032500 (DWG N.)	1 / 1 (PG.)