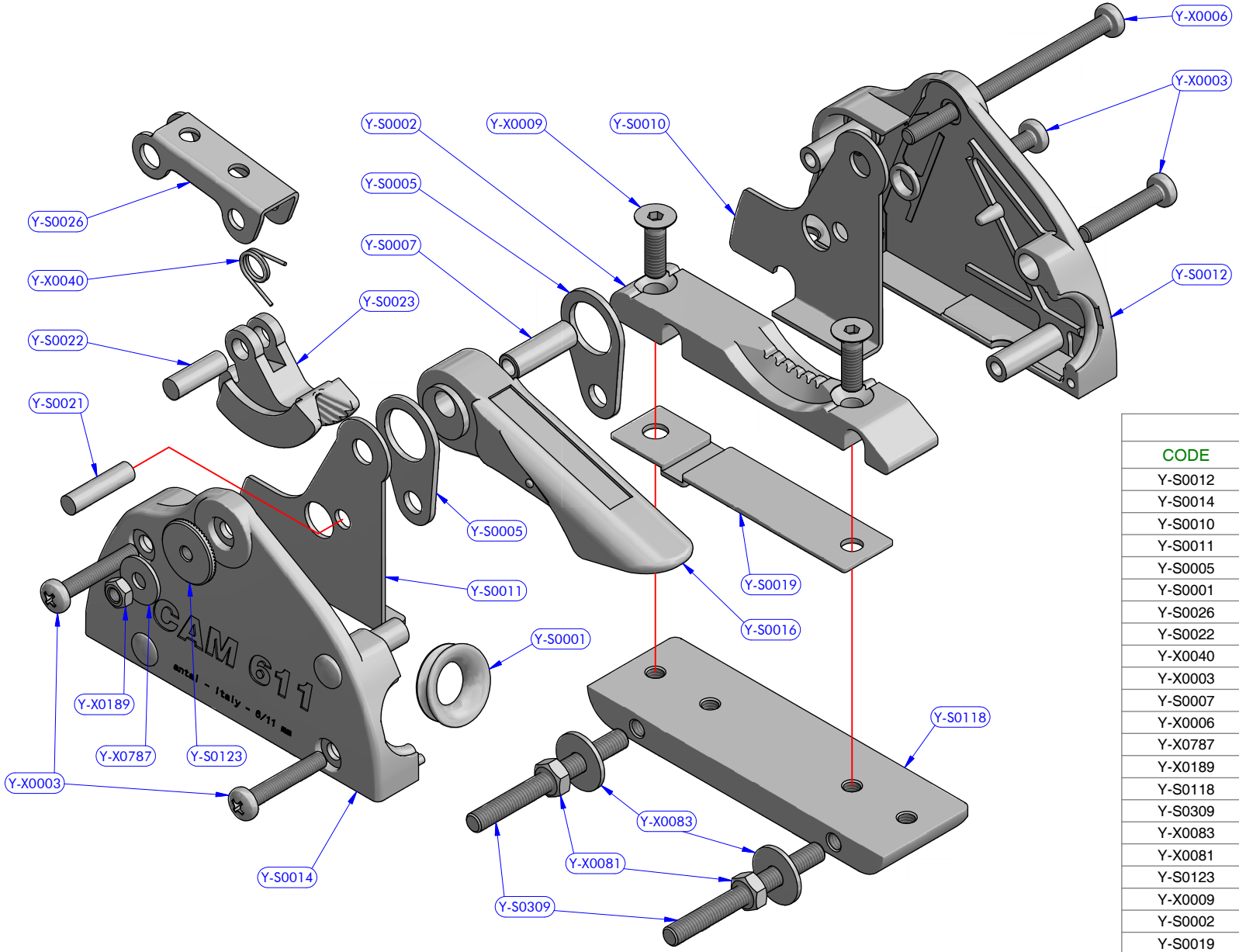

PART LIST			
CODE	DESCRIPTION	MATERIAL	Q.TY
Y-S0012	Cheekplate	Plastic	1
Y-S0014	Cheekplate	Plastic	1
Y-S0010	Right side plate	S.Steel	1
Y-S0011	Left side plate	S.Steel	1
Y-S0005	Connecting rod	Aluminium	2
Y-S0001	Ring	Chromed brass	1
Y-S0026	Cam bracket	S.Steel	1
Y-S0022	Spindle	S.Steel	1
Y-X0040	Torsion spring	S.Steel	1
Y-X0003	Screw	S.Steel	4
Y-S0007	Pipe spacer	Chromed brass	1
Y-X0006	Screw	S.Steel	1
Y-X0787	Washer	S.Steel	1
Y-X0189	Nut	S.Steel	1
Y-S0118	Base	Aluminium	1
Y-S0309	Stud	S.Steel	2
Y-X0083	Washer	S.Steel	2
Y-X0081	Nut	S.Steel	2
Y-S0123	Knurled washer	S.Steel	1
Y-X0009	Screw	S.Steel	2
Y-S0002	Base	Aluminium	1
Y-S0019	Base spacer	Plastic	1
Y-S0021	Spindle	S.Steel	1
Y-S0023	V-Grip Cam	S.Steel	1
Y-S0016	Lever	Plastic	1

antal	CAM 611 series (FAMILY)	Clutch (ARTICLE)	500.210 (MODEL CODE)	04/06/2019 (DATE)	00 (REV.)
	Exploded view (DESCRIPTION)			19060414 (DWG N.)	1 / 1 (PG.)