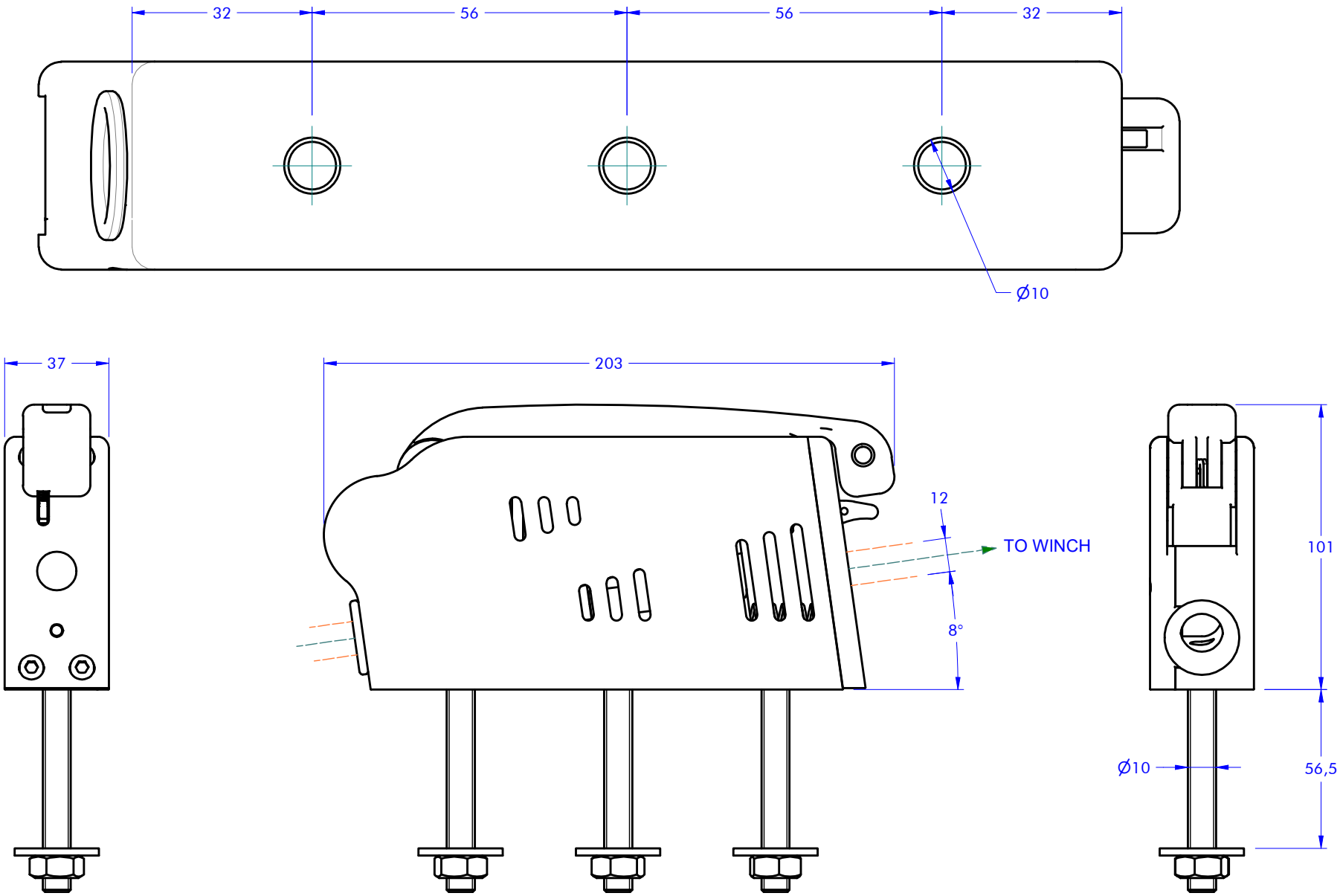

antal	Clutch QR12 Standard	506.121	2200 kg	1.54 kg
	DESCRIPTION	MODEL CODE	SWL	WEIGHT
			23/11/2018	07	1 : 1
			DATE	REV.	SCALE

www.antal.it - antal@antal.it

This drawing is Antal's exclusive ownership, protected by law. Cannot be reproduced or handed over without preventive written consent.