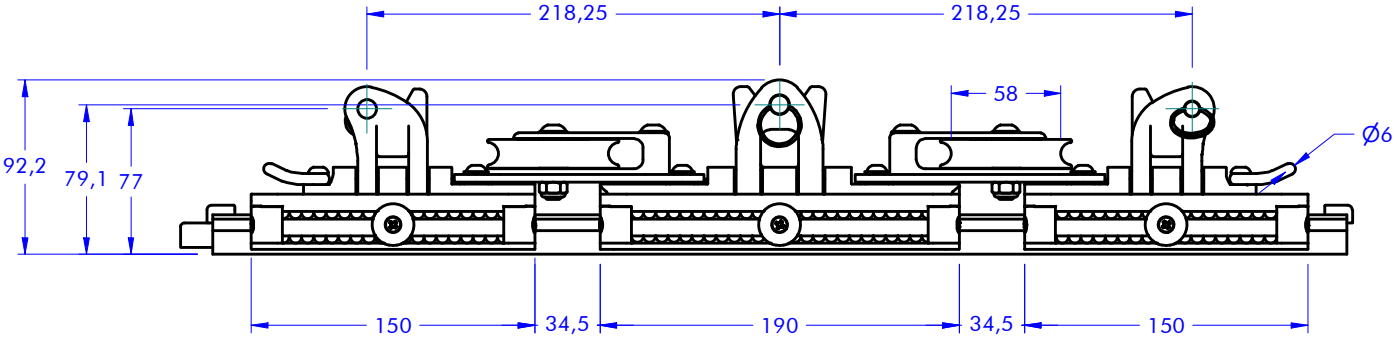

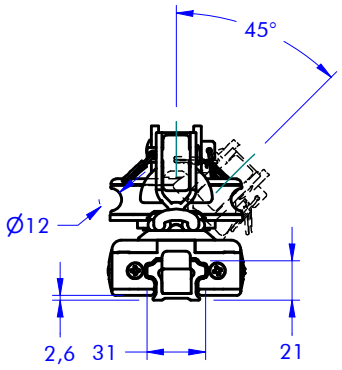

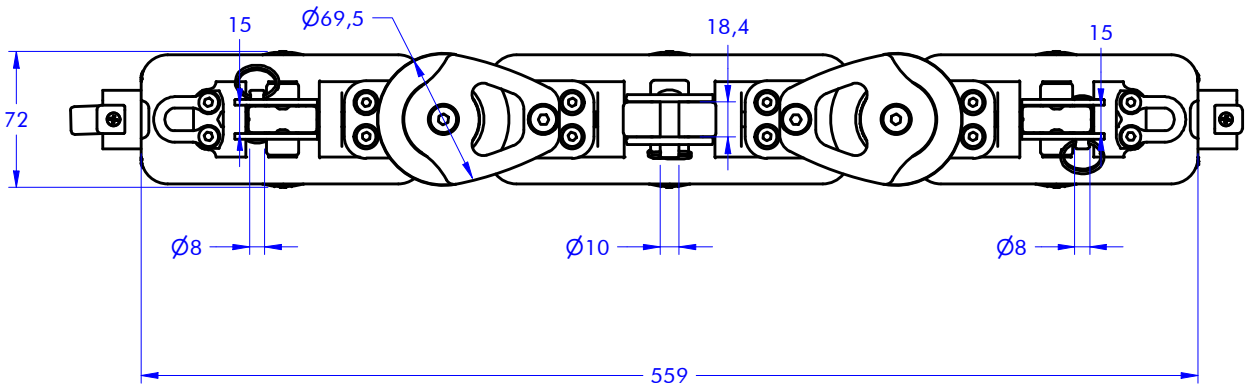

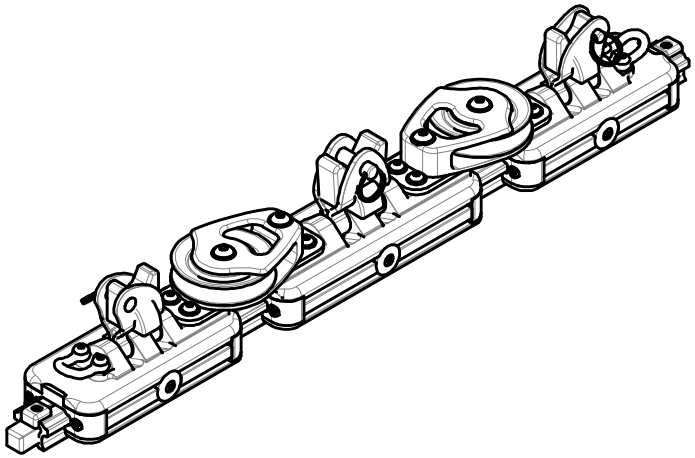

antal	Ball bearing cars CATEGORY	4Race series FAMILY	5197 MODEL CODE	4400 kg SWL	3,4 kg WEIGHT
	Main car ARTICLE			18/02/2020 DATE	1 : 4 SCALE
	www.antal.it - antal@antal.it				