PART LIST			
CODE	DESCRIPTION	MATERIAL	Q.TY
Y-S0012	Right	Plastic	1
Y-S0014	Cheekplate	Plastic	1
Y-S0006	Threaded pipe	Chromed brass	1
Y-S0013	Cheekplate	Plastic	2
Y-X0004	Screw	S.Steel	2
Y-S0007	Pipe spacer	Chromed brass	2
Y-X0006	Screw	S.Steel	4
Y-SA004	Base module	Various	3
Y-SA003	Lever assy	Various	3
Y-S0004	Base	Aluminium	3

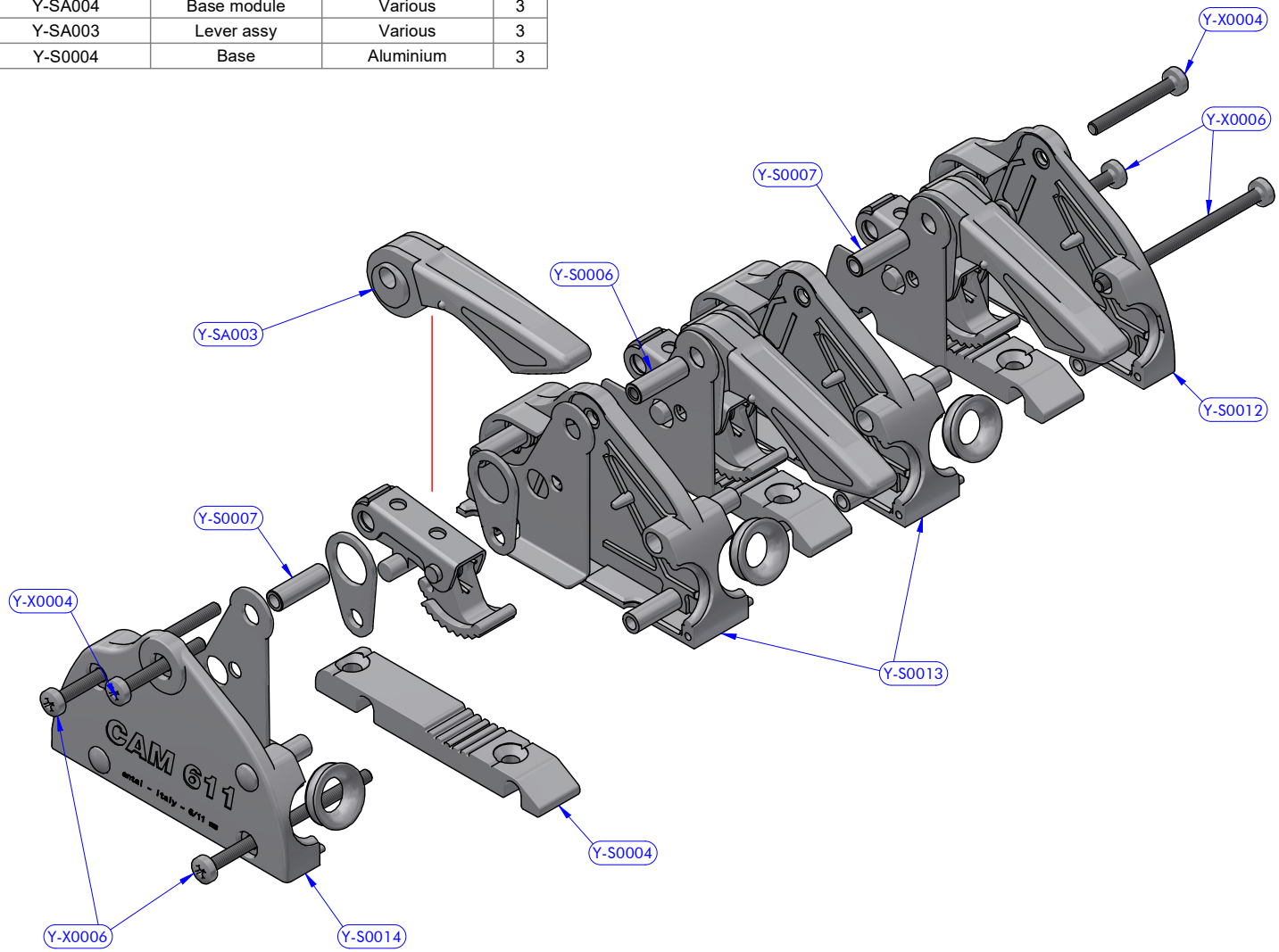

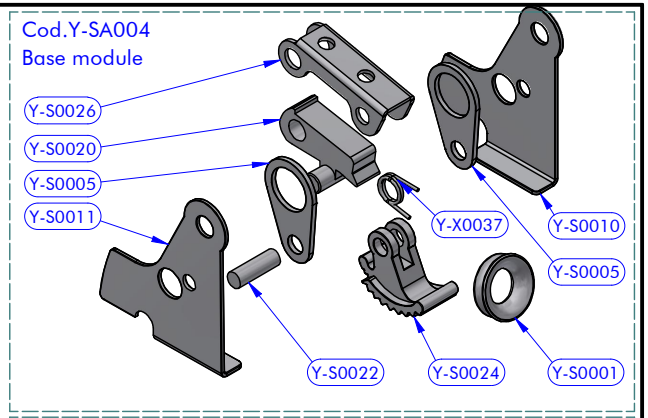

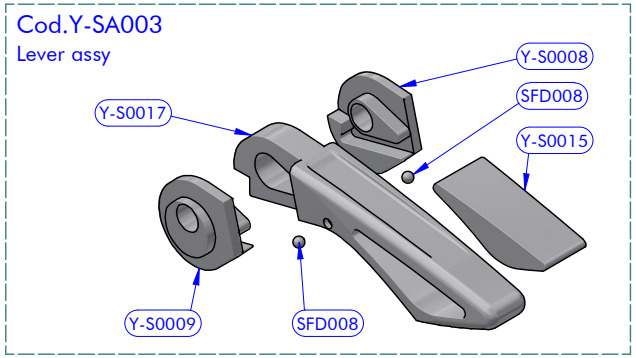

PART LIST - Y-SA004			
CODE	DESCRIPTION	MATERIAL	Q.TY
Y-S0010	Reinforcement plate	S.Steel	1
Y-S0011	Reinforcement plate	S.Steel	1
Y-S0005	Connecting rod	Aluminium	2
Y-S0026	Cam bracket	S.Steel	1
Y-S0024	Cam-cleat	Chromed brass	1
Y-S0020	Cam bracket	Plastic	1
Y-X0037	Torsion spring	S.Steel	1
Y-S0022	Cylinder pin	S.Steel	1
Y-S0001	Ring	Chromed brass	1

PART LIST - Y-SA003			
CODE	DESCRIPTION	MATERIAL	Q.TY
SFD008	Delrin ball	Plastic	2
Y-S0008	Cam	Plastic	1
Y-S0009	Cam	Plastic	1
Y-S0015	Insert	Plastic	1
Y-S0017	Lever	Aluminium	1

antal	Clutch CAM 611 Triple Silver Handle DESCRIPTION	543.130 MODEL CODE	11/05/2023 DATE	00 REV.
			23042711 DWG N.	1 / 1 PG.