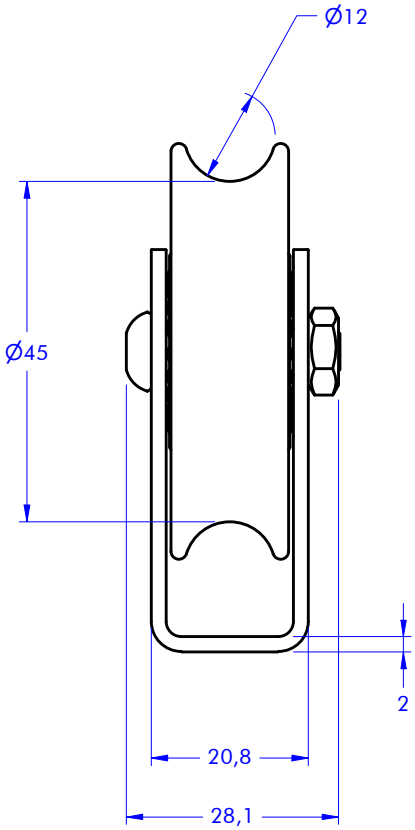

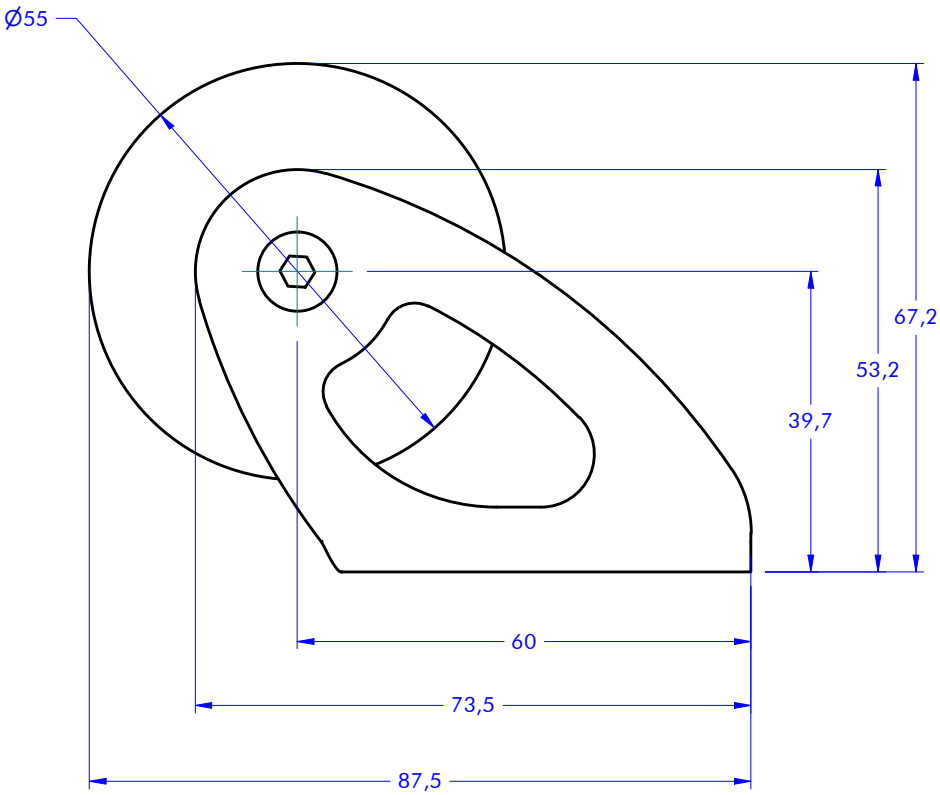

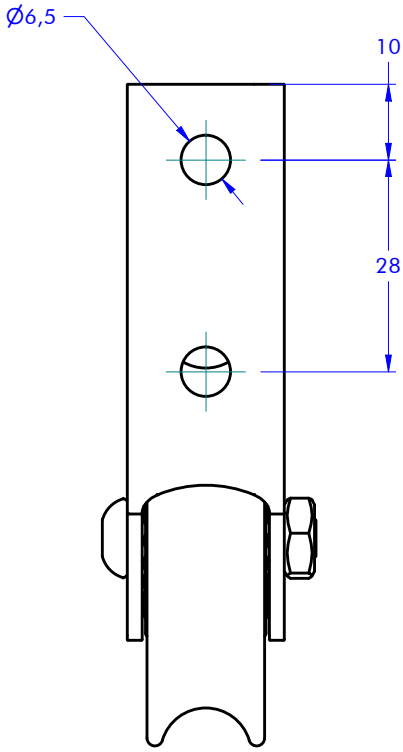

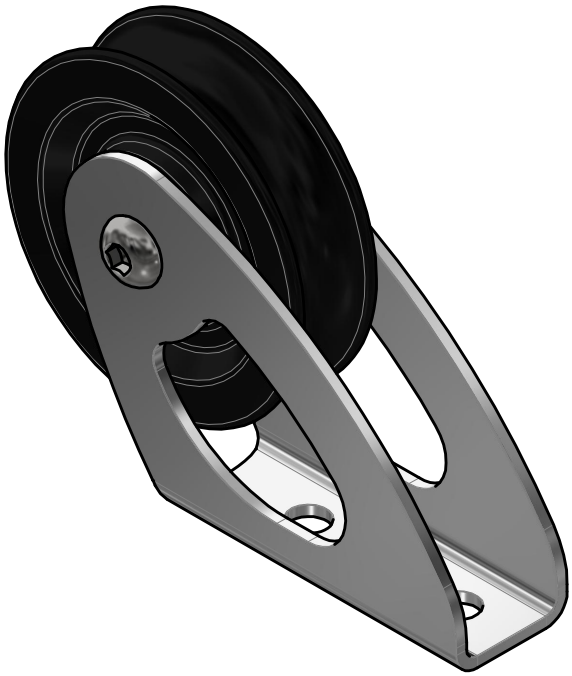

antal	Blocks (CATEGORY)	Halyard blocks (FAMILY)	815.552 (MODEL CODE)	SWL	WEIGHT
	Halyard block (ARTICLE)			11/05/2020 (DATE)	1 : 1 (SCALE)
	www.antal.it - antal@antal.it				