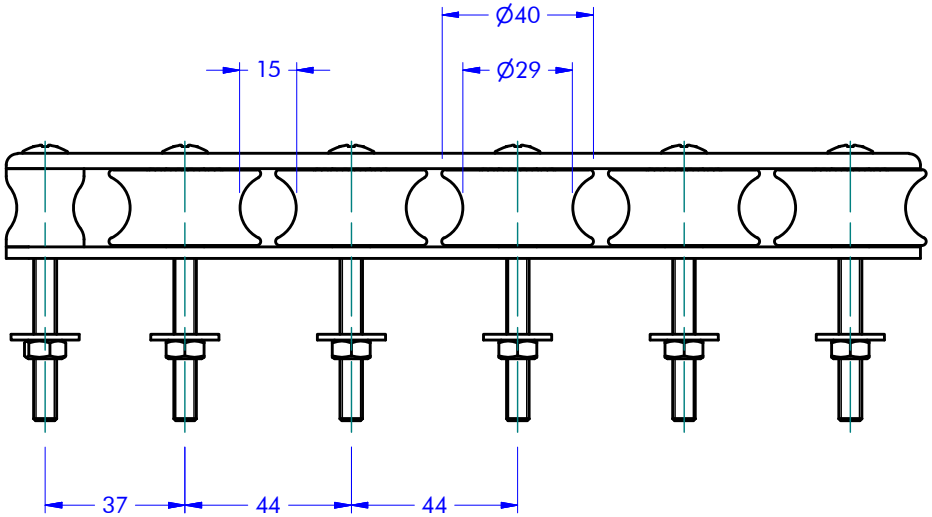

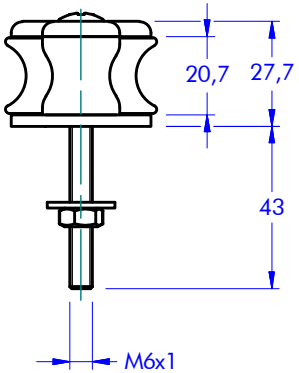

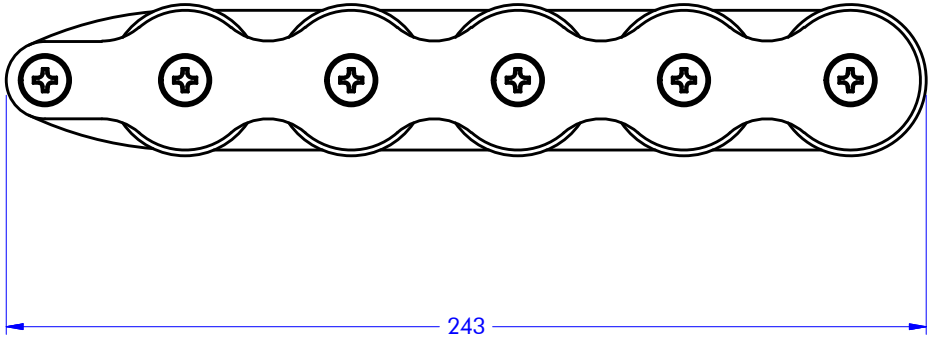

antal	Deck Blocks 1 CATEGORY	Organizer 2 FAMILY	D450 CODICE	600 Kg SWL	1 : 2 SCALA
	sheaves 5 x Ø40 3 ARTICLE			29/03/2016 DATA	00 REVISIONE