Installation and Maintenance Manual

MRPW30

Performa™ Winch 30.2 PTP

HARKEN®

Introduction 3

Technical characteristics 3
Weight 3
Maximum working load 3

Outline 3

Installation 4
Installation procedure 5

Maintenance 7
Washing 7
Maintenance table 7
Disassembly procedure 7
Exploded view with maintenance products 10
Assembly 11

Harken® limited worldwide warranty 11

Ordering spare parts 11

Exploded view 13

Parts list 15

Introduction

This manual gives technical information on winch installation and maintenance, including disassembling and reassembling.
This information is destined exclusively for specialised personnel or expert users.
Installation, disassembling and reassembling of the winch by personnel who are not experts may cause serious damage to users and those in the vicinity of the winch.
Harken accepts no responsibility for defective installation or reassembly of its winches.
In case of doubt the Harken Tech Service is at your disposal at techservice@harken.it
This Manual is available only in English. If you do not fully understand the English language, do not carry out the operations described in this Manual.

Technical characteristics

	Power ratio	Gear ratio
1st speed	7,8 : 1	1,1 : 1
2nd speed	29,8 : 1	4,25 : 1

The theoretical power ratio does not take friction into account.

Weight

	PT version
Weight (Kg)	2,3

Maximum working load

WARNING!
The maximum working load (MWL) for the 30.2 PT Performa™ Winch is 550 Kg (1213 lb)
Subjecting the winch to loads above the maximum working load can cause the winch to fail or pull off the deck suddenly and unexpectedly during high loads causing severe injury or death.

Outline

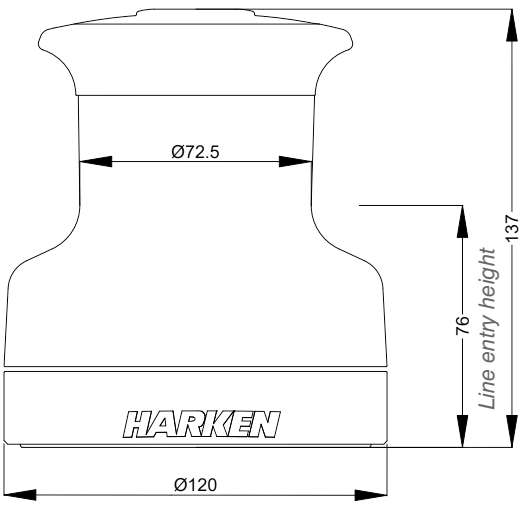

Installation

The winch must be installed on a flat area of the deck, reinforced if necessary to bear a load equal to at least twice the maximum working load of the winch.
It is the installer's responsibility to carry out all structural tests needed to ensure that the deck can bear the load. Harken® does not supply the screws needed to install the winch since these may vary depending on the deck on which it is to be installed.
It is the installer's responsibility to choose the correct screws taking account of the loads they will have to bear. Harken® assumes no responsibility for incorrect installation of its winches or for an incorrect choice of mounting screws.

DANGER!
Incorrect installation of the winch may cause severe injury or death. Consult the yard that built the boat in the case of doubt over the correct positioning of the winch.

WARNING!
Failure to use the correct number and type of mounting fasteners or failure to ensure the correct deck strength can result in the winch pulling off the deck suddenly and unexpectedly during high loads causing severe injury or death.

WARNING!
Verify the entry angle of the sheet. This must be 8° with tolerance of ±2°, to avoid sheet overrides and damaging the winch or making the winch inoperable leading to loss of control of the boat which can lead to severe injury or death.

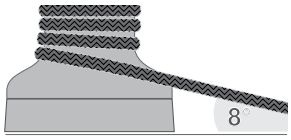

WARNING!
Mount the winch on the deck so that the drive gear is positioned where the sheet enters the winch drum.
Incorrect position of drive gear can weaken winch leading to failure which can cause an accident leading to severe injury or death.

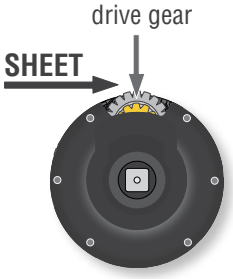

Once you have chosen the correct mounting position for the winch on the deck proceed with installation.

Installation procedure

To install the winch, remove the drum and use 5x M6 socket head (SH) bolts.

Tools needed

One medium flat-bladed screwdriver

Hex key: size 4

To identify the various parts, refer to the exploded view at the end of this Manual.

🔧 Torque to apply when assembling

Install the winch on the deck in the position you have chosen, keeping in mind the limits described on page 3.

1. Unscrew the central screw
(🔧2Nm/18 in-lb)

2. Slide off the socket

3. Unscrew the 3x M5 screws.
Hex key size: 4
(🔧4Nm/35 in-lb)

4-5. Slide off the top and the drum

Carry out the installation procedure, then install the winch on the deck in the chosen position.

A. Position the base of the winch on the deck and mark the position of the holes or use the drilling cut-out template at the point where you have decided to place the winch.

Below is a reduced scale diagram.

The drilling cut out template is available on the Harken website, www.harken.com

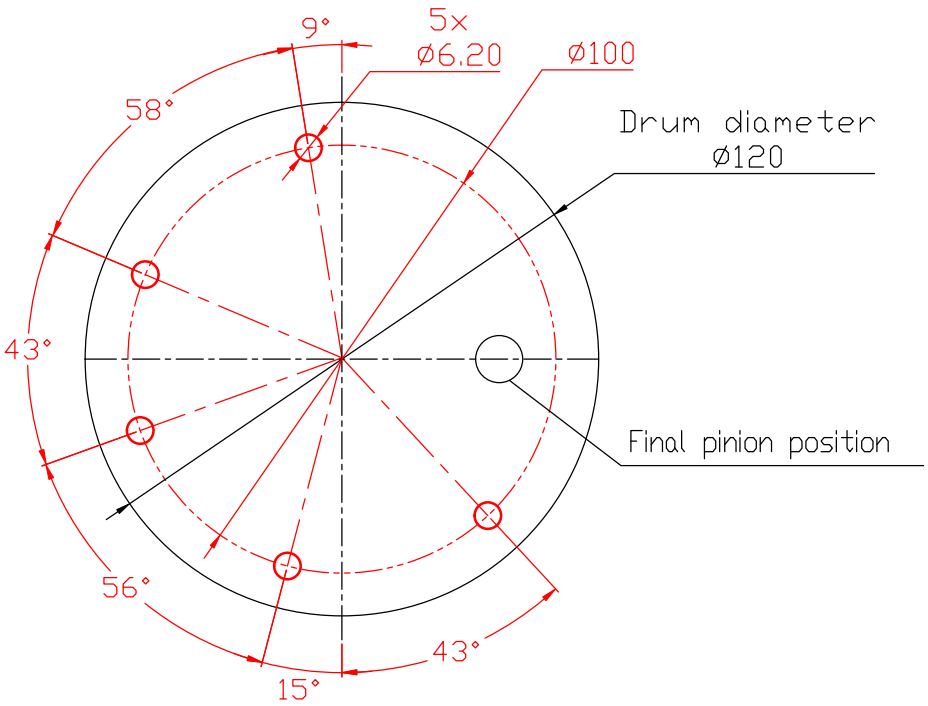

B. Remove the winch and drill the five 6.2 mm diameter holes.

C. Bolt the base of the winch to the deck using 5x M6 bolts (not supplied by Harken), correctly chosen for the thickness and type of the boat deck. Consult the yard that built the boat in case of doubt.

WARNING!
To install the winch on the deck, use only bolts in A4 stainless steel (DIN 267 part11). Bolts made of other materials may not have sufficient strength or may corrode which can result in winch pulling off deck suddenly and unexpectedly during high loads causing severe injury or death.

NOTICE
To mount winches on the deck, do not use countersunk bolts.

D. Fill the mounting holes with a suitable marine sealant.

E. Remove the excess adhesive/sealant from the holes and base drainage channels

F. Reassemble the winch following the steps in the reverse order of the procedure, and apply the products indicated in the section on maintenance.

NOTICE
Before closing the winch, make sure the holes and drainage channels in the base of the winch are not obstructed.

Maintenance

Washing

Winches must be washed frequently with fresh water, and in any case after each use.
Do not allow teak cleaning products or other cleaners containing caustic solutions to come into contact with winches and especially anodised, chrome plated or plastic parts.
Do not use solvents, polishes or abrasive pastes on the logos or stickers on the winches.
Make sure that the holes and drainage channels in the base of the winch are not obstructed so that water does not collect.

Maintenance table

Winches must be visually inspected at the beginning and end of every season of sailing or racing.
In addition they must be completely overhauled, cleaned and lubricated at least every 12 months.
After an inspection, replace worn or damaged components. Do not replace or modify any part of the winch with a part that is not original.

WARNING!
Periodic maintenance must be carried out regularly. Lack of adequate maintenance shortens the life of the winch, can cause serious injury and also invalidate the winch warranty.
Installation and maintenance of winches must be carried out exclusively by specialized personnel.
In the case of doubt contact Harken® Tech Service at techservice@harken.it

Disassembly procedure

Tools needed

One medium flat-bladed screwdriver

A number 4 and 5 hex key

Rags

To identify the various parts refer to the exploded view at the end of this Manual.

🔧 Torque to be applied in assembly phase

Carry out the procedure as shown in the paragraph on winch installation and then do the following:

6. Unscrew the 5x M6 screws
Hex key size: 5
(🔧10Nm/88,5 in-lb)

7. Slide out the drum support

8. Slide out the central shaft, the pawls and their springs

9. Slide out the final pinion and its pin

10. Slide out the idler gear and the central pinion, paying attention to the pawls and their springs

Once the winch is completely disassembled, clean the parts with a degreasing that does not leave residues, proper to clean metal components; rinse plastic parts in fresh water. Once you have done this, dry the parts with cloths that do not leave residue.

Inspect gears, bearings, pins and pawls for any signs of wear or corrosion.

Carefully check the teeth of gears and ring gears to make sure there are no traces of wear.

Check the roller bearings and check there are no breaks in the bearing cages.

Replace worn or damaged components.

Carry out maintenance on components using the products listed below.

For more information on which products to use where, refer to the exploded diagram below.

Use a brush to lightly lubricate all gears, gear pins, teeth and all moving parts with grease.

Lightly lubricate the pawls and springs with oil.

Do not use grease on the pawls.

Exploded view with maintenance products

- A Anti-seize
- G Harken® Grease
- O Harken® Pawl Oil
- T Axial Threadlocker

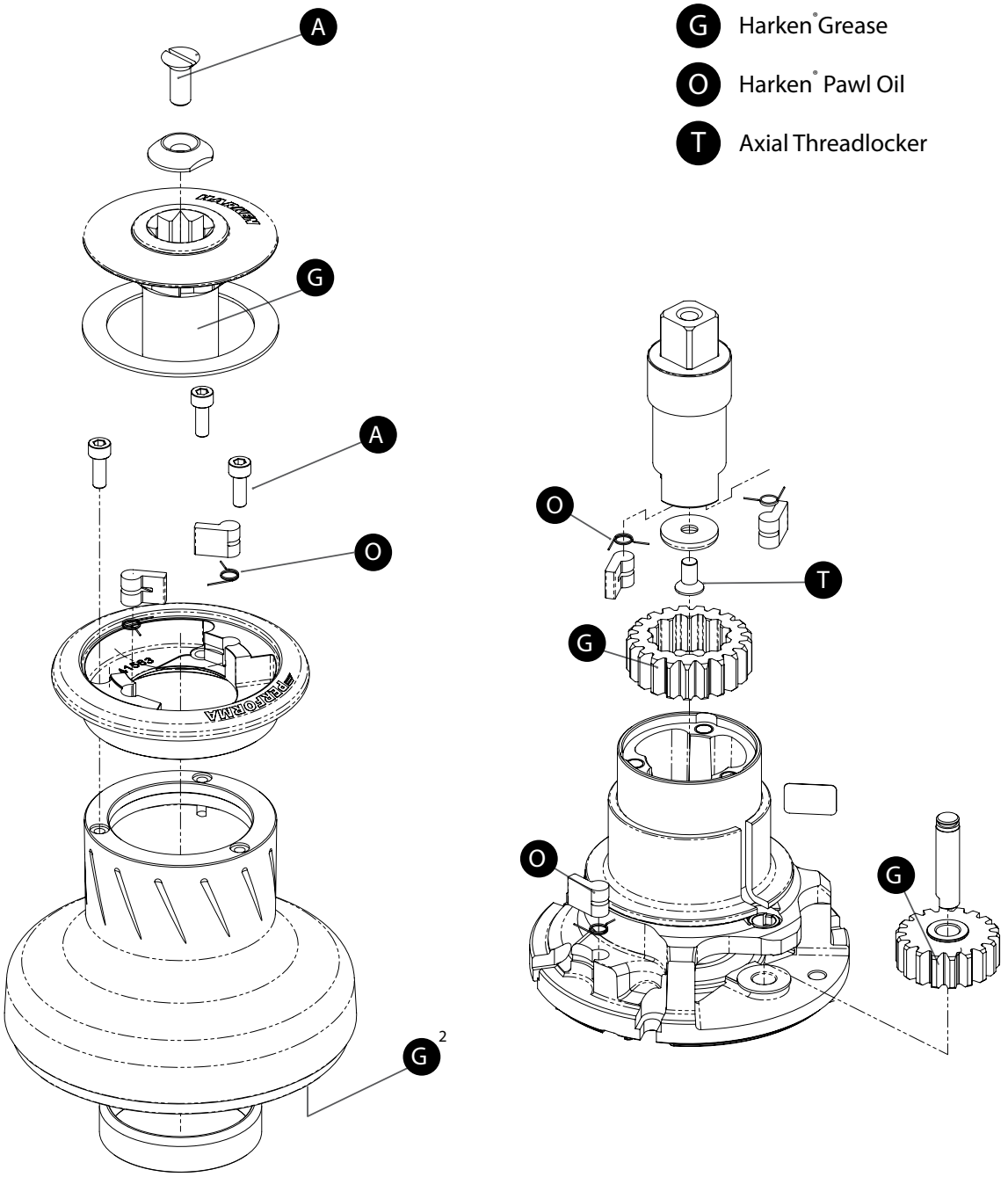

Apply Harken® grease where indicated above
Apply Harken® grease: 1. on assy socket screw - 2. on drum gear

NOTICE

On every gear and every component that must be greased, apply Harken® grease with a brush in a proper quantity as shown below:

NOTICE

Harken® grease to apply on all teeth: do not use excessive quantity of product to void wastes. If in contact with the pawls, an excess of grease can compromise the safety of the winch.

Assembly

Make sure that the holes and drainage channels in the base of the winch are not obstructed. Assemble the winch in the reverse order of the sequence in the section on disassembly.

To tighten bolts, use the torque indicated in the disassembly procedure.

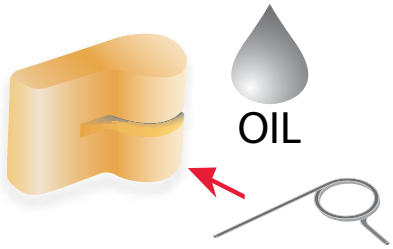

To assemble the pawls:
correctly position the spring in its housing as shown at left. Hold the spring closed and slide the pawl into its housing. Once in position, check that the pawls can be easily opened and closed with a finger.

In case of doubt concerning the assembly procedure contact Harken® Tech Service: techservice@harken.it

Harken® limited worldwide warranty

Refer to the Harken® Limited Worldwide Warranty in the Harken® Catalogue and on the website www.harken.com

Ordering spare parts

Spare parts can be requested from Harken® as described in the Harken® Limited Worldwide Warranty, indicating the part number in the Parts List and including the serial number of the winch for which the parts are required.

The serial number of the winch is printed on a plate on the drum support of the winch.

Manufacturer

Harken® Italy S.p.A.
Via Marco Biagi, 14
22070 Limido Comasco (CO) Italy
Tel: **(+39) 031.3523511**
Fax: **(+39) 031.3520031**
Email: **info@harken.it**
Web: **www.harken.com**

- **Tech Service**
  Email: **techservice@harken.it**
- **Customer Service**
  Tel: **(+39) 031.3523511**
  Email: **info@harken.it**

Headquarters

Harken®, Inc.
1251 East Wisconsin Avenue
Pewaukee, Wisconsin 53072-3755 USA
Tel: **(262) 691.3320**

Email: **harken@harken.com**
Web: **www.harken.com**

- **Tech Service**
  Email: **technicalservice@harken.com**
- **Customer Service**
  Tel: **(262) 691-3320**
  Email: **customerservice@harken.com**

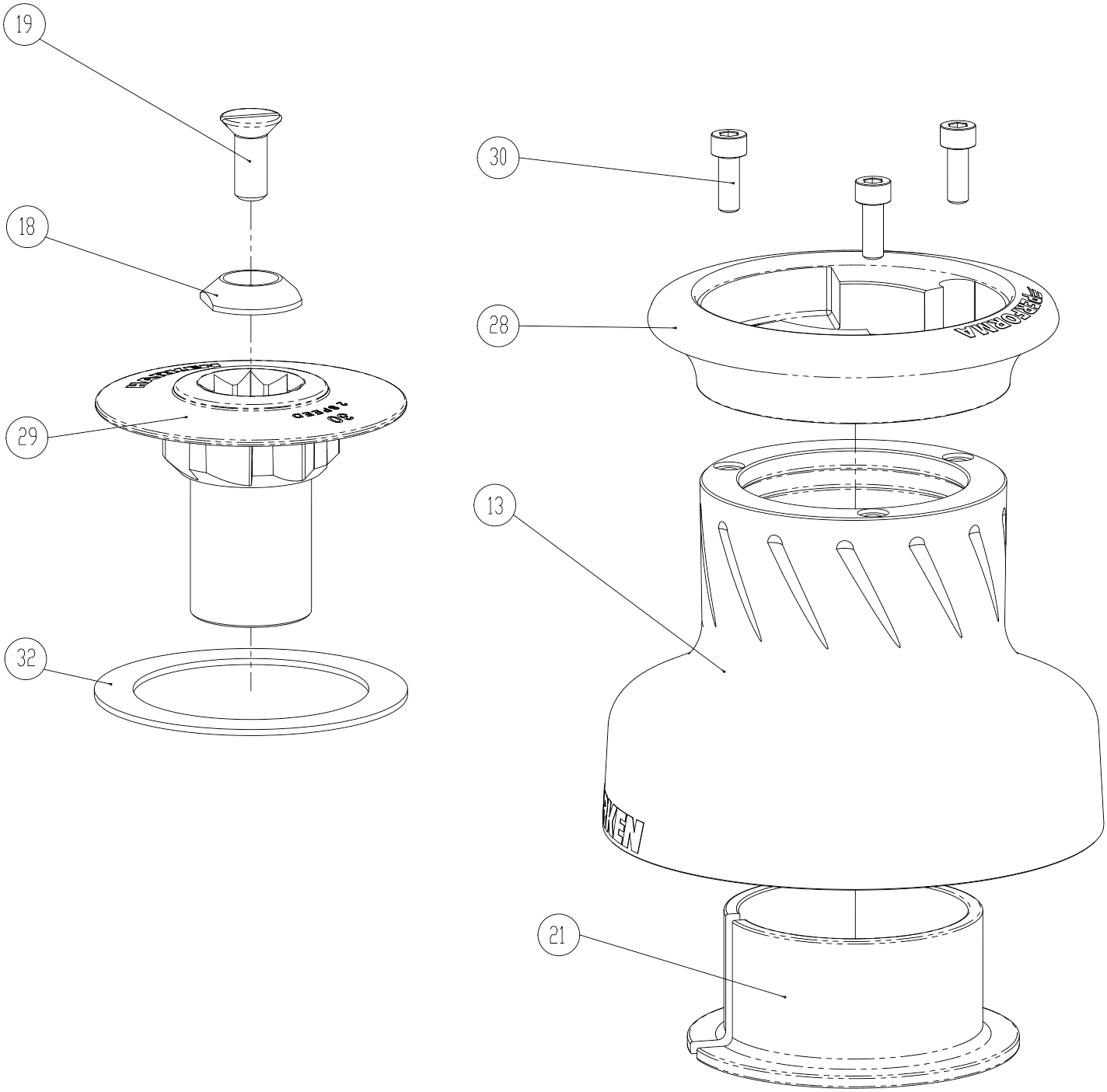
19
18
29
32
30
28
13
21

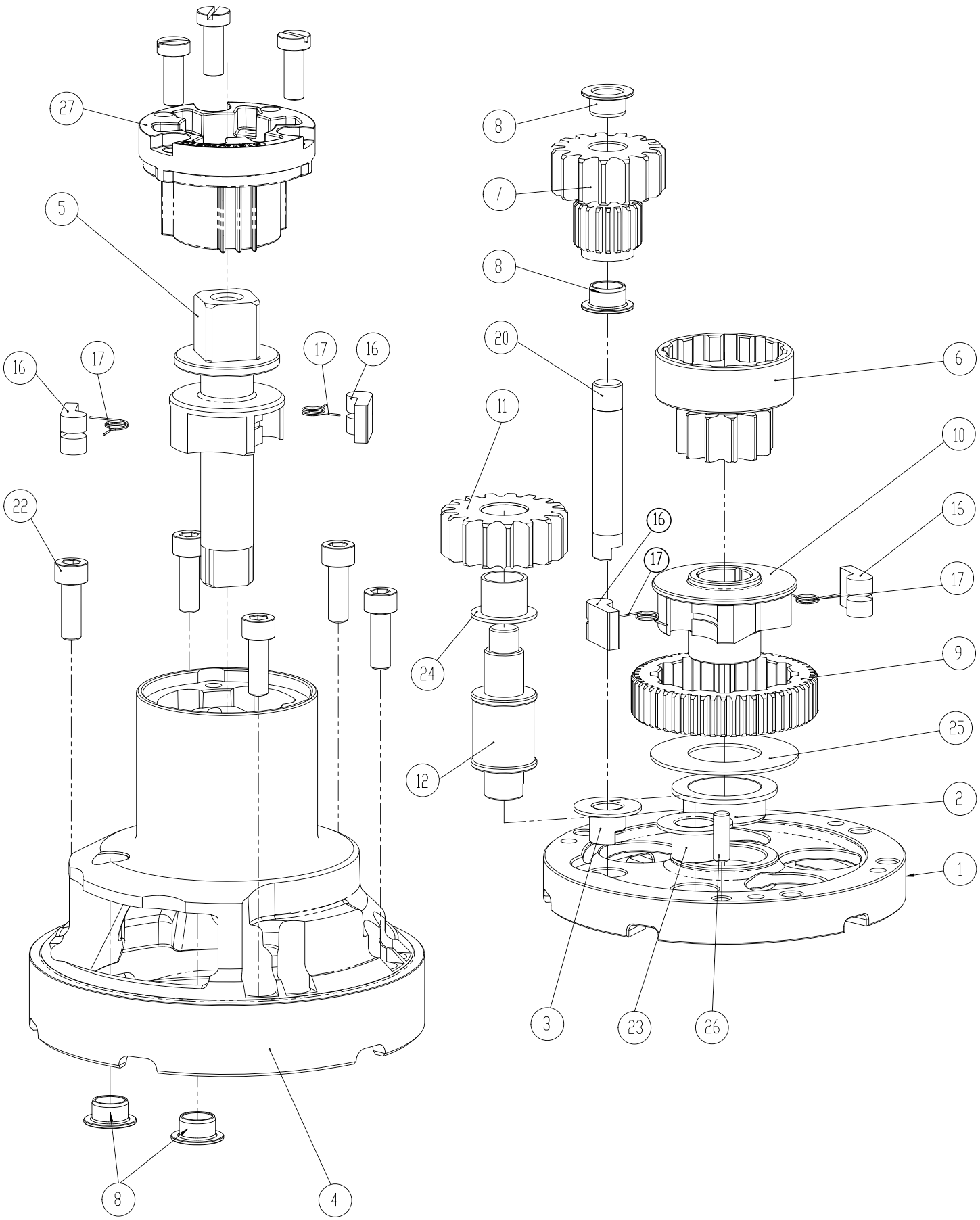
27
5
16
17
17
16
22
8
4
8
7
8
20
11
24
12
6
10
16
17
16
17
9
25
2
1
3
23
26

Performa Winch 30.2 PTP

Pos	Q.ty	Code	Description
1	1	S740320052	Base W30STP
2	1	S4152300A7	Bushing Ø22xØ25x9.5
3	1	S413960085	Bushing Ø9xØ11x12
4	1	S740330053	Drum support W30
5	1	S760680004	Central shaft
6	1	S740350041	Gear Z=12
7	1	S740370004	Pinion final Z=15
8	4	S418730080	Bushing Ø9xØ11x7
9	1	S740360041	Gear Z=55
10	1	S740380041	Pawl carrier W30
11	1	S740400041	Gear Z=17
12	1	S740410004	Idler pin W30
13	1	S678220053	Drum Performa W30
14	1	-	Winch Serial Number Sticker*
15	1	-	Winch Product Sticker**
16	4	S000080003	Pawl Ø8
17	4	S000380001	Pawl Spring dia 8
18	1	S415130085	Washer Ø7.7xØ25x5.8
19	1	M0614303	Screw M8x20 UNI 6109
20	1	S413000004	Pin ø9x55
21	1	S413720080	Bushing Ø55xØ62x34
22	5	M0634803	Screw M6x18 - A4 UNI 5931:2003
23	1	S413330085	Bushing Ø12xØ14x11
24	1	M0604394	Bushing 12x14x12
25	1	S413120002	Washer Ø22.5xØ45x1
26	1	S675530083	Roller Ø5x15
27	1	S7027000A0	Socket support Winch 20 PT
28	1	S760690053	Top plate W30.2P
29	1	S760700052	Handle socket W30.2P
30	3	M0638803	Screw M5x14 UNI 5931
31	3	M0601903	Screw M6x16 UNI1207
32	1	S678720082	Washer Ø56.5xØ75x1.5

**Available with service kit; see website www.harken.com*

***Winch product sticker*